This piece is identical to the outer armor piece, with additional material removed.

All internal corners have .125 radius.

All exposed edges to be releaved to prevent cutting of wires passing through openings in the structure.

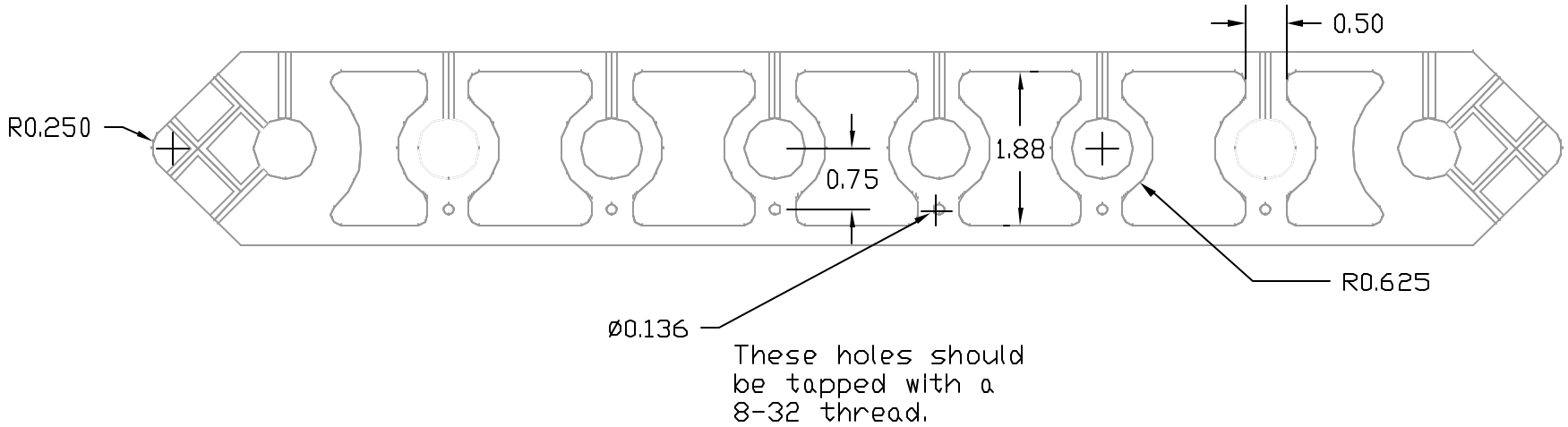

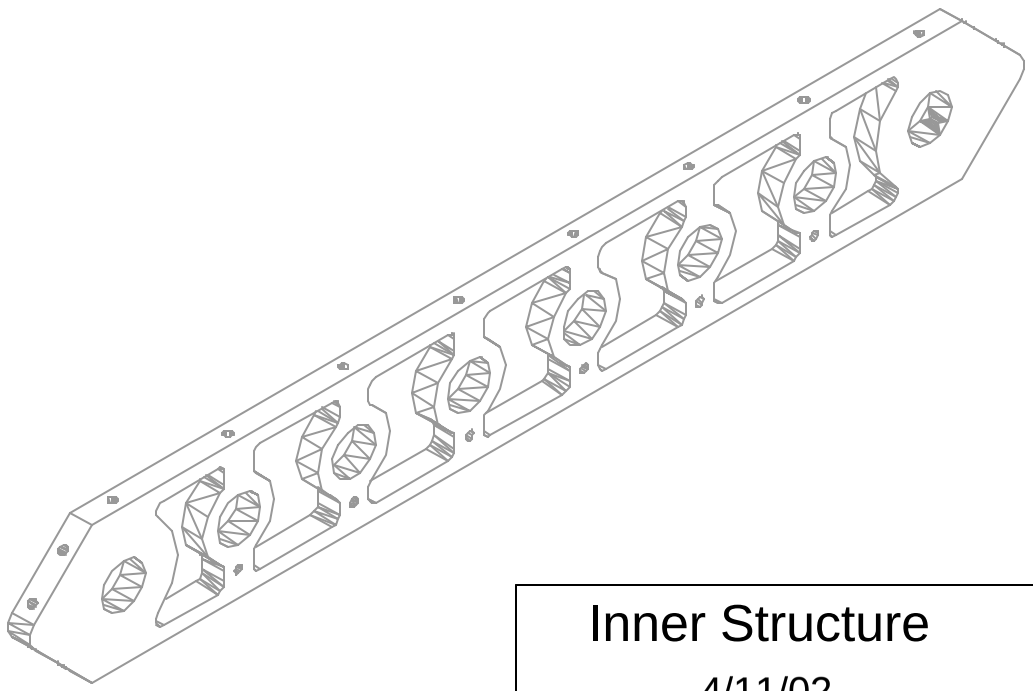

Inner Structure

4/11/02

Clobberbots
Joseph P Fieber
4069 South Packard Avenue, St. Francis, WI 53235
414-482-8905